INSTALLATION MANUAL

High Temperature
Hydro Module

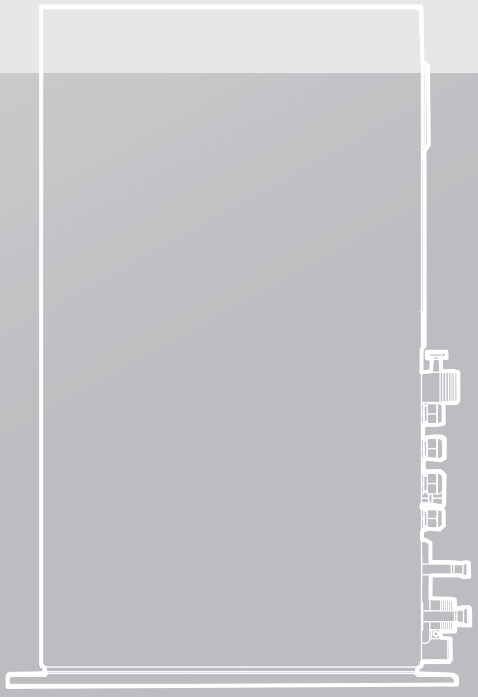

IMPORTANT NOTE:

Original instructions
Thank you very much for purchasing our air conditioner.
Before using your air conditioner, please read this manual carefully and keep it for future reference.
The figure shown in this manual is for reference only and may be slightly different from the actual product.

CONTENTS

Accessories 01

1 DEFINITIONS

- 1.1 Meanings of Warnings and Symbols 02

2 GENERAL SAFETY PRECAUTIONS 02

3 OVERVIEW

- 3.1 Introduction 02
- 3.2 Combinations and Options 03
- 3.3 Application Scope of the Manual 03
- 3.4 Specification 03

4 UNIT APPEARANCE

- 4.1 Structural Dimensions 04
- 4.2 Center of Gravity 04
- 4.3 Installation Space 05
- 4.4 General Precautions about the Water System 06
- 4.5 Checking, Handling, and Unpacking the Unit 07
- 4.6 Installation Diagram 07

5 UNIT INSTALLATION 08

6 APPLICATION EXAMPLES 15

7 PUMP MODEL SELECTION 22

8 SELECTION OF EXPANSION TANK VOLUME AND PRESET PRESSURE 22

9 DOMESTIC HOT WATER TANK 23

10 FINAL CHECK AND TEST RUN

- 10.1 Final Check 23
- 10.2 Test Run 23

11 MAINTENANCE AND SERVICE 23

Accessories

Name	Qty	Shape	Purpose
Installation Manual	1		—
User Manual	1		—
Connecting pipe assembly (Including safety valve)	1	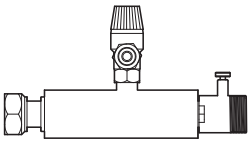	Connected to the water-outlet pipe side
Water discharge hose	1		Connected to the outlet of the drainage pan
Wired controller	1	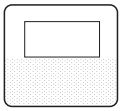	Control the unit
Water temperature sensor	1		Detecting water tank temperature
Y-shaped filter	1	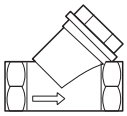	Connected to the water-inlet pipe side
Network matching wire	1		—
Cable tie	6		Fixing the wire and magnetic ring
Magnetic ring	2	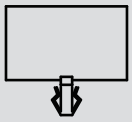	—

1 DEFINITIONS

1.1 Meanings of Warnings and Symbols

Warnings in this document are classified according to severity and the likelihood of occurrence.

⚠ DANGER

Indicates an urgent danger, which may lead to severe injury or death.

⚠ WARNING

Indicates a potential danger, which may possibly lead to severe injury or death.

NOTE

Indicates a potential danger, which may lead to mild or moderate injury. It can also be used to warn you of unsafe behaviours.

STATEMENT

Indicates a situation that may only cause damage to the equipment or loss of property.

INFORMATION

Indicates a useful hint or additional information.

Certain types of danger are indicated by special symbols.

Elctric shock

Danger of burning and scalding

2 GENERAL SAFETY PRECAUTIONS

Herein, the precautions are classified into the following two types, which cover very important items. Please read them carefully.

⚠ DANGER

Electric shock

Before removing the maintenance panel of the electric control box or performing any connections or touching an electric part, please shut down all the power.

Do not touch any switches with wet hands. This is to prevent electrical shock. Before touching an electrical part, please shut down all related power.

Wait 3 minutes after disconnecting power,them verify DC voltage less than 42VDC at inverter test point DC-BUS(CN52).Components may store a dangerous electrical potential of 380VDC.Failure to follow this warning could result in personal injury or death.

When the maintenance panel is removed, you may easily touch the live parts. Therefore, when you remove the maintenance panel, do not engage in unattended installation or maintenance.

⚠ DANGER

Do not touch pipes and internal parts.

Do not touch refrigerant pipes, water pipes or internal parts during operation and immediately after operation. Pipes and internal parts may be hot depending on the operating status of the unit.

If you touch pipes or internal parts, burning may occur. It takes time for pipes and internal parts to regain a normal temperature. To avoid injury, you must wear protective gloves before touching them.

3 OVERVIEW

3.1 Introduction

This installation manual applies to high temperature hydro module indoor unit. This appliance is intended to be used by expert or trained users in shops, in light industry and on farms, or for commercial use by lay persons. The units is partial unit heat pump, complying with partial unit requirements of this International Standard, and must only be connected to other units that have been confirmed as complying to corresponding partial unit requirements of this International Standard.

when the product is used for comercial application. This appliance is intended to be used by expert or trained users in shops, in light industry and on farms, or for commercial use by lay persons,the sound pressure level is below 70 dB(A).

The hydro module is designed to operate indoors at room temperature from 0 °C to 40 °C.

During heating or DHW, the unit can increase water temperature from 25 °C to 80 °C.

3.2 Combinations and Options

The Hydro Module unit can be connected to the V6R ODU only.

The wired controller with an indoor constant temperature function is the standard configuration of the unit, for unit control.

3.3 Application Scope of the Manual

This manual does not contain model selection and water system design. Another chapter in this manual just provides the precautions, hints, and tips about water system design. Once the model is selected and the water system is designed, the water system should be connected to the unit. This document describes how to conduct handling, installation, and connection for connecting the water system to the Hydro Module unit.

INFORMATION

For the articles beyond this manual, please read the Installation Manual about the ODU. The Hydro module's User Manual describes how to use the Hydro module.

3.4 Specification

Heating capacity	Rated Water outlet : 45°C, inlet 40°C Outdoor air : 7°C DB / 6°C WB	kW	14
Casing	Colour	mm	Polar white
Net Dimensions	Height	mm	795
	Width	mm	450
	Depth	kg	300
Weight	Unit	kg	63
	Packed unit	kg	71
Water Flow Rate	Minimum	m³/h	1.2
	Nominal	m³/h	2.4
	Maximum	m³/h	2.9
Water circuit	Piping connections diameter (external groove)	mm	25.4 / 25.4
Design pressure	Allowed water pressure	Mpa	0.1~0.3
	R410a	Mpa	4.0
	R134a	Mpa	3.1
Refrigerant	Type		R-134a
	Charge	kg	1.2
Refrigerant circuit	Gas side diameter	mm	12.7
	Liquid side diameter	mm	9.52
Refrigerant oil	Charged volume	L	0.4
	Type		FV50S
Heating capacity	Rated Water outlet : 45°C, inlet 40°C Outdoor air : 7C DB / 6C WB	kW	14
Sound pressure level	Nom.	dB(A)	43
Sound Power Level	Nom.	dB(A)	54
Heating Operation Range	Ambient, Min	°C	-20
	Ambient, Max	°C	30
	Water Side, Min	°C	25
	Water Side, Max	°C	80
Domestic Hot Water Operation Range	Ambient, Min	°C	-20
	Ambient, Max	°C	43
	Water Side, Min	°C	25
	Water Side, Max	°C	80
Refrigerant side heat exchanger	Type		Plate heat exchanger
	Quantity		1
	Plate		76
Water side Heat exchanger	Type		Plate heat exchanger
	Quantity		1
	Plate		38
Unit Location Installation place	Ambient, Min-Max	°C	0~40
Power supply	Phase		1-ph
	Frequency	Hz	50/60
	Voltage	V	220 ~ 240
	Voltage Range, Min/ Max	%	± 10
Current Amper	Maximum running current (MCA)	A	16
	MFA	A	20

Note:

*Nominal heating conditions

inlet water temperature: 40 °C

water flow rate: 2.4 m³/h

Outdoor Temp. : 7°C DB/6°C WB

*The water circuit must use the closed circuit.

*Please do not use it as a drinking water.

* Due to continuing improvement, the above specifications may be subject to change without notice.

* Please don't use the steel material for the water piping material.*

* Please always make water circulate or pull out the circulation water completely when not using it.

*Please do not use groundwater and well water.

4 UNIT APPEARANCE

4.1 Structural Dimensions (unit: mm)

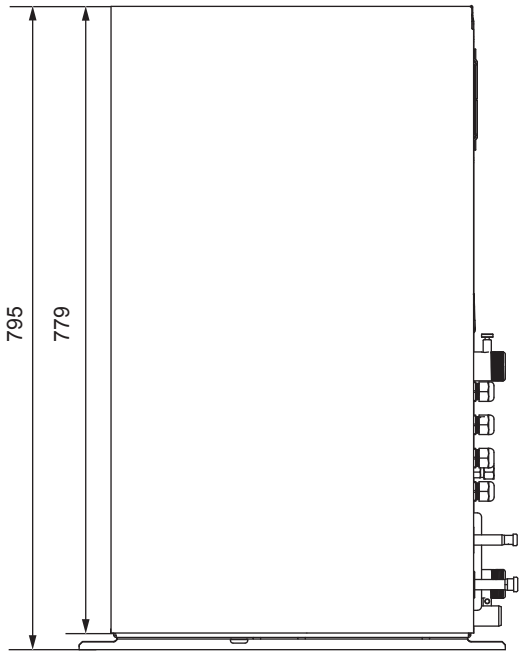

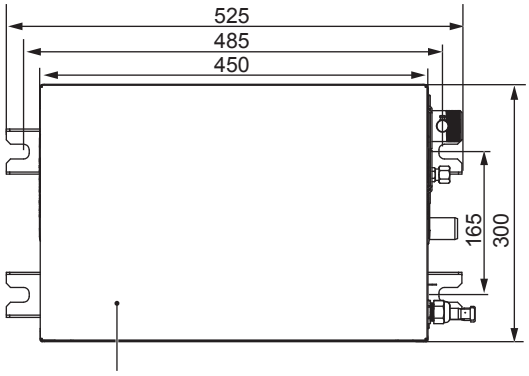

4.2 Center of Gravity (unit: mm)

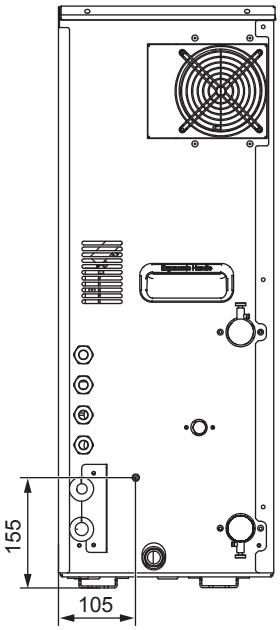

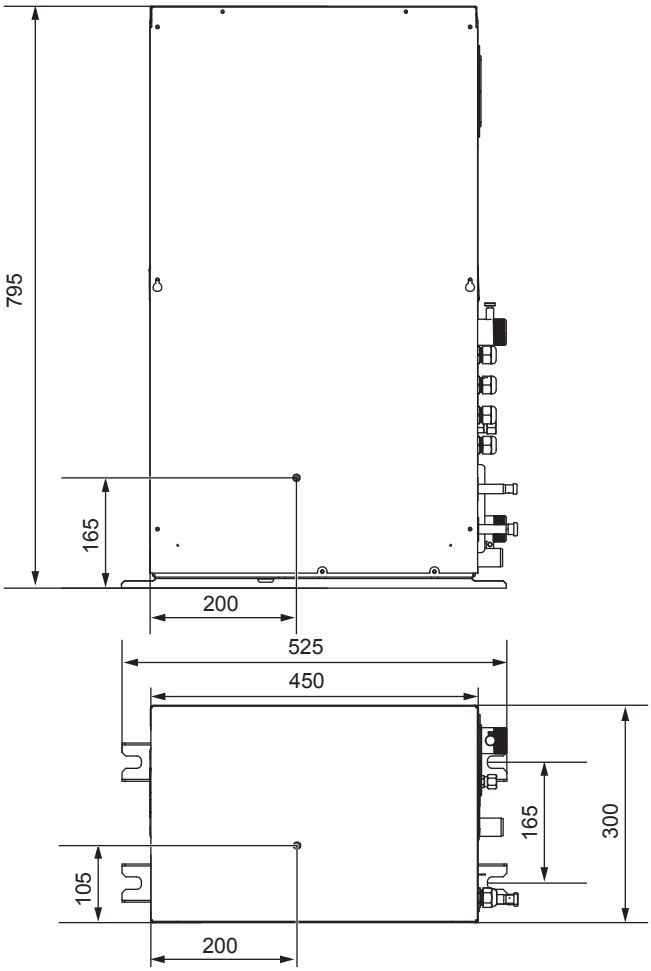

4.3 Installation Space

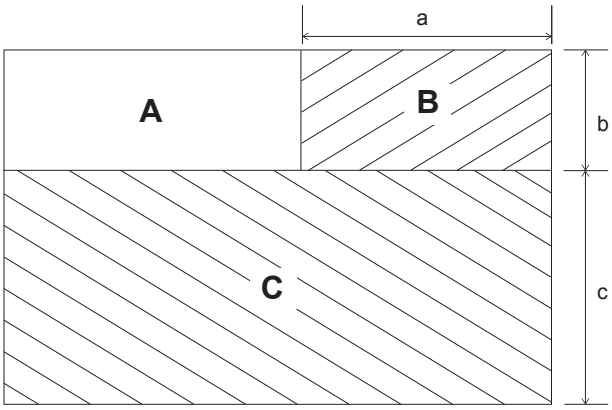

A	Hydro module unit
B	Space for installing piping (on the right side)
C	Space for installation and maintenance (in the front)

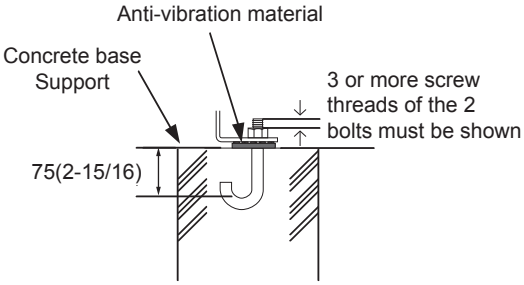

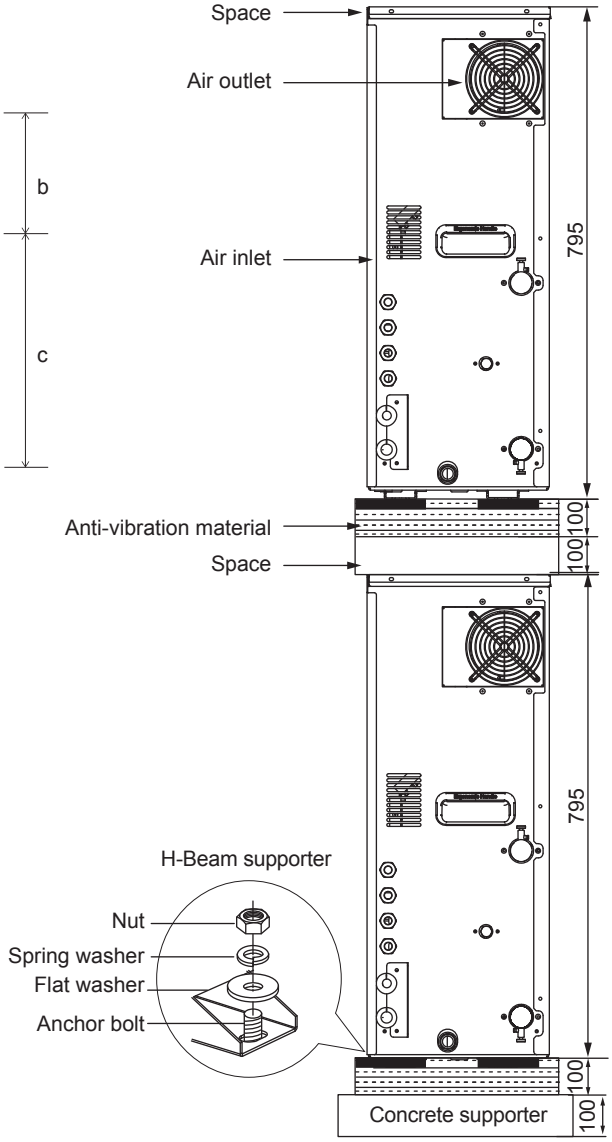

General Precautions about Installation Sites

Select an installation site that meets the following conditions:

- The floor that supports unit weight should be hard enough. The floor should be level to avoid vibration and noise.
- The space around the unit should be wide enough for maintenance and repair. The space dimensions are as follows: a ≥ 400 mm; b ≥ 300 mm; c ≥ 600 mm. If double-layer installation is required, the upper and lower space between units should be not less than 150 mm.
- There should be enough space around the unit for ventilation.
- If flammable gas leaks, ensure that there are no hazards that could lead to fire.
- This unit is not designed to operate in an environment where explosions could occur.
- Select the installation site according to the corresponding legal provisions. The noise should not affect any person. Carefully select an installation site. Do not install the unit in an environment that is sensitive to sound, such as living rooms and bedrooms.
- If water leaks, the leakage should not cause damage to the installation site or the surroundings.
- Take enough measures according to the corresponding legal provisions to deal with refrigerant leakage.
- When the unit is installed in a small room, take measures to ensure that concentration of the leaking refrigerant cannot exceed the allowed limit.
- For applicances intended for use at altitudes exceeding 2000 m, the maximum altitude of use shall be stated.

⚠ WARNING

In an airtight space, excessively high concentration of the refrigerant may lead to insufficient oxygen.

- Do not climb, sit on, or stand on the unit.
- Do not place any article or equipment on the top of the unit (top panel of the unit).
- Do not install the unit in a workshop, for example, a construction site, because at construction sites, the equipment will be covered in dust.
- Do not install the unit in a highly damp site, such as a restroom. (The maximum relative humidity is 85%.)
- When installing the unit, reserve enough space for the air inlet and air outlet. Do not obstruct them.

4.4 General Precautions about the Water System

Check the following items before continuing installation:

- Min. water pressure: 1 bar
- Max. water pressure: 3 bar
- Min. water temperature: 5°C
- Max. water temperature: 80 °C
- Install enough safety devices in the water loops to ensure that the hydro pressure does not exceed the maximum operating pressure (3 bar).
- Provide a drainage hole at all the low points of the system so that the water is completely drained from the water system when you repair or maintain the unit. A drain valve has been installed at the water inlet to facilitate water discharge from the unit's water system.
- Ensure that you have provided a suitable water discharge pipe to the safety valve to prevent water from coming into contact with any electrical part. A water discharge pipe has been provided with the unit.
- You must deploy air outlets at all the high points of the system. The air outlets should be deployed at the places where they can be easily maintained. A drain valve has been installed at the water outlet to facilitate air discharge from the unit's water system.
- Ensure that all the components installed on pipes on site can bear water pressure and water temperature.
- You should use materials that are compatible with water and equipment in the system.
- Anti-freezing protection of the water system:
  - Freezing may cause damage to the system. The ODU may be exposed to temperatures below 0 °C. You must prevent the system from freezing.
  - All the internal water systems are insulated to prevent heat loss. On site, pipes should be fitted with insulating materials.
  - The unit is designed with an anti-freezing function. The unit uses a heat pump to prevent the entire system from freezing. When the water temperature in the system decreases to a certain value, the unit will heat water. The anti-freezing function will be disabled only when the water temperature rises to a certain value.
  - In the event of power failure, the anti-freezing function cannot protect the unit from freezing.
  - Using anti-freezing liquid in the water system is recommended, because power failure may happen when no one is present.
  - Ensure that the water system is full of the ethylene glycol concentration provided in the following table, according to the expected lowest outdoor temperature. When ethylene glycol is added to the system, device performance will be affected. The following table lists the correction coefficients of the unit capacity, flow, and pressure drop of the system.

Ethylene Glycol

Quality of glycol/%	Modification coefficient				Freezing point/°C
	Cooling capacity modification	Power modification	Water resistance	Water flow modification	
0	1.000	1.000	1.000	1.000	0.000
10	0.984	0.998	1.118	1.019	-4.000
20	0.973	0.995	1.268	1.051	-9.000
30	0.965	0.992	1.482	1.092	-16.000
40	0.960	0.989	1.791	1.145	-23.000
50	0.950	0.983	2.100	1.200	-37.000

Propylene Glycol

Quality of glycol/%	Modification coefficient				Freezing point/°C
	Cooling capacity modification	Power modification	Water resistance	Water flow modification	
0	1.000	1.000	1.000	1.000	0.000
10	0.976	0.996	1.071	1.000	-3.000
20	0.961	0.992	1.189	1.016	-7.000
30	0.948	0.988	1.380	1.034	-13.000
40	0.938	0.984	1.728	1.078	-22.000
50	0.925	0.975	2.150	1.125	-35.000

- If ethylene glycol is not added, water must be discharged when power is cut off.

⚠ WARNING

Both ethylene glycol and propylene glycol are toxic.

The concentration mentioned in the preceding table cannot prevent freezing, but can prevent breaking caused by liquid pressure.

4.5 Checking, Handling, and Unpacking the Unit

When the unit is delivered, you must check the equipment and immediately report damage (if any) to the claims agent of the carrier.

Put the packaged unit as close as possible to its final installation site to prevent damage during the handling process.

Check all the accessories of the Hydro module. (For details, see " Accessories" on page 1.)

⚠ WARNING

Remove the plastic packaging bag so that children cannot play with it. Children may face the danger of death by suffocation if playing with the plastic packaging bag.

4.6 Installation Diagram

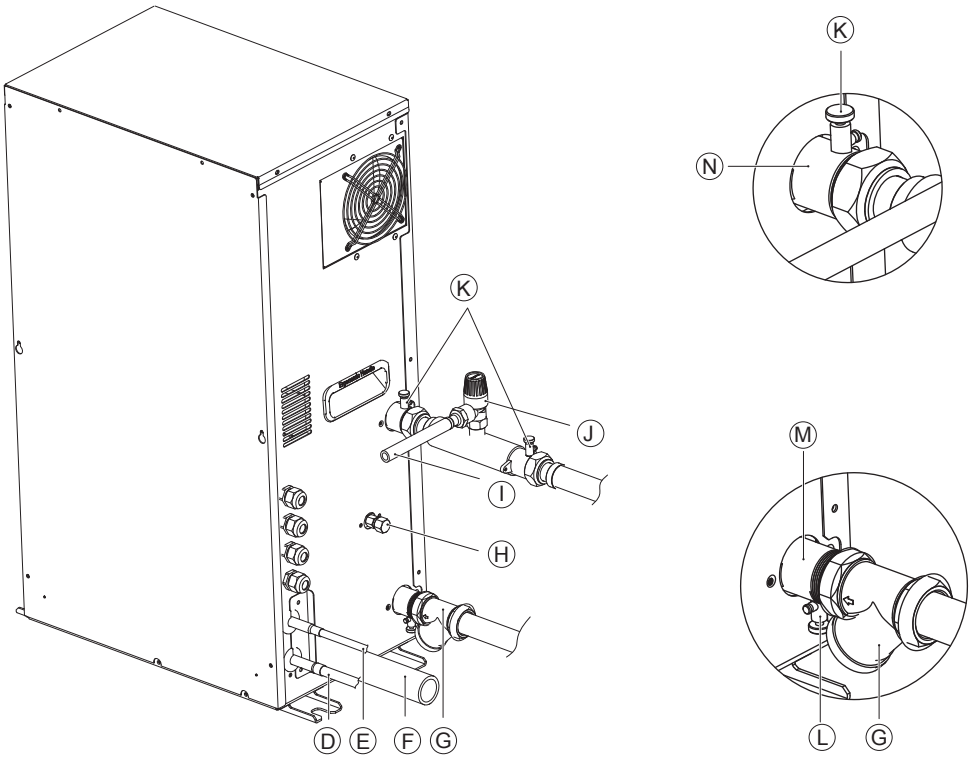

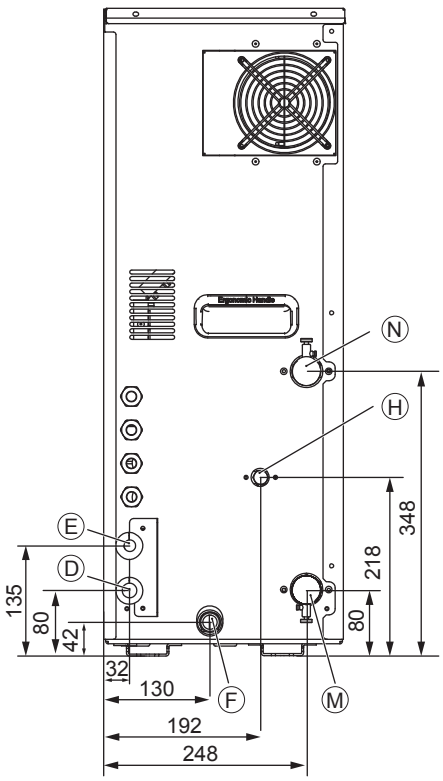

D	Liquid pipe (connected to the ODU)
E	Gas pipe (connected to the ODU)
F	Water discharge pipe (drainage pan)
G	Y-shaped filter
H	Access hole (for charging/discharging refrigerant)
I	Water discharge pipe (safety valve)
J	Safety valve
K	Discharge valve
L	Drain valve
M	Water inlet
N	Water outlet

5 UNIT INSTALLATION

INFORMATION

The unit should be installed by professional installation operators. Material selection and installation should conform to the corresponding legal provisions.

Checking the main parts of the unit

To check the interior of the unit, open the top panel, front panel, and rear panel first. After you open these three panels, you can see the main parts of the unit. If you just install or maintain the internal parts of the electric control box, you need to open the front panel without needing to open the top or rear panel

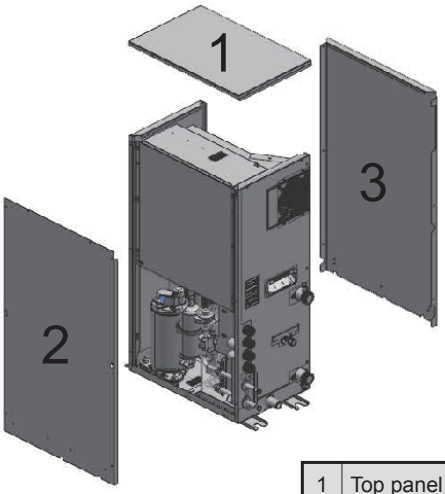

1	Top panel
2	Front panel
3	Rear panel

To open the electric control box and operate the interior of the electric control box, open the electric control box cover plate. To open the electric control box, you can open the front panel without needing to open the top or rear panel.

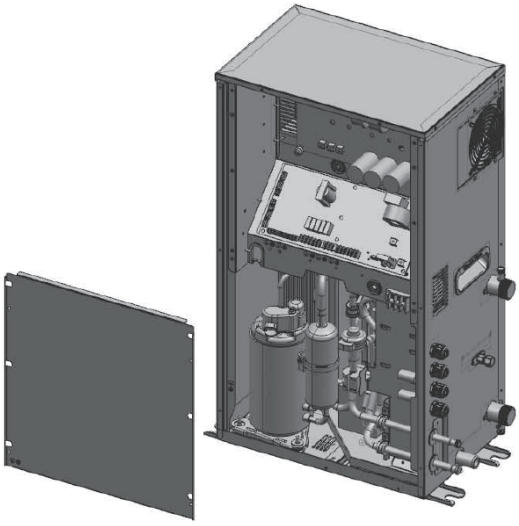

Danger: Electric shock
See "1.2 General Safety Precautions" on page 2.

Danger: Do not touch pipes or internal parts. See "1.2 General Safety Precautions" on page 2.

Main parts of the unit

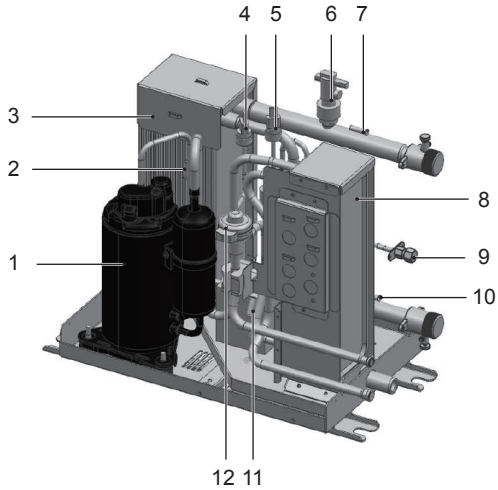

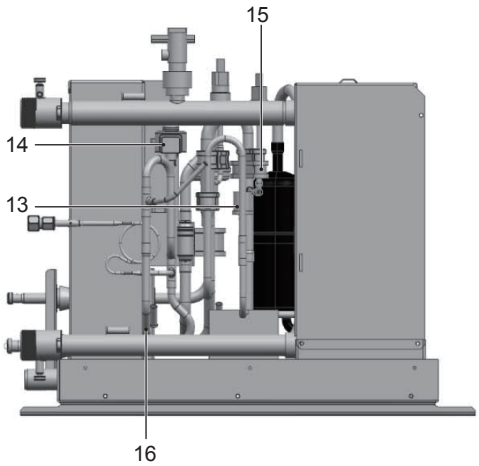

1	Compressor	9	Service pot
2	Discharge temperature sensor	10	Water inlet temperature sensor
3	Plate heat exchanger used as condenser	11	Liquid pipe temperature sensor at the outlet on the R410A refrigerant side
4	Low pressure sensor	12	Electronic expansion valve on the R410A loop
5	High pressure sensor	13	High pressure switch
6	Water flow switch	14	Electronic expansion valve on the R134a loop
7	Water outlet temperature sensor	15	Suction temperature sensor
8	Plate heat exchanger used as evaporator	16	Liquid pipe temperature on the R134a loop

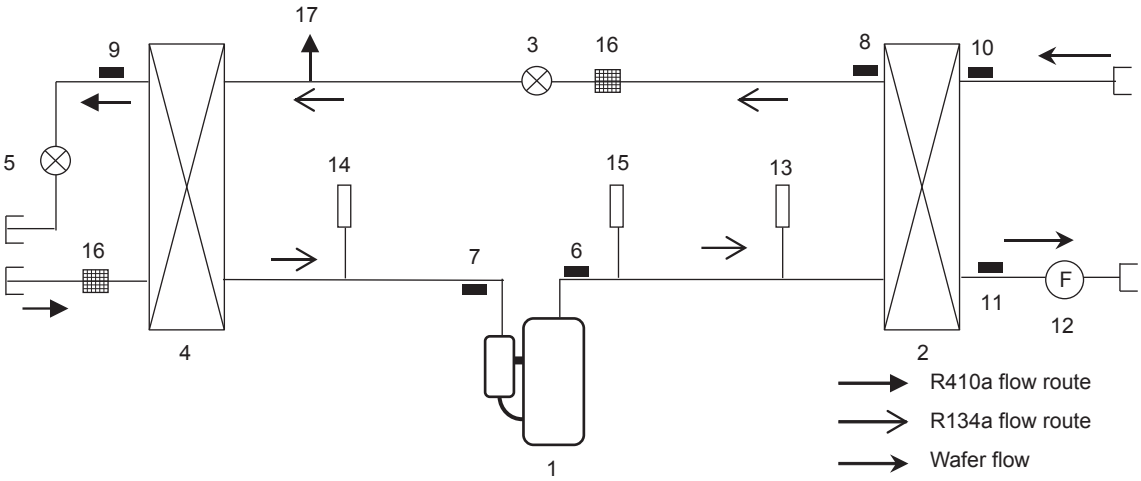

1	Compressor	10	Water inlet temperature sensor
2	Plate heat exchanger used as condenser	11	Water outlet temperature sensor
3	Electronic expansion valve 1 on the R134a loop	12	Water flow switch
4	Plate heat exchanger used as evaporator	13	High pressure sensor
5	Electronic expansion valve 2 on the R410A loop	14	Low pressure sensor
6	Discharge pipe temperature sensor	15	High pressure switch
7	Suction pipe temperature sensor	16	Filter
8	Liquid pipe temperature sensor on the R134a loop	17	Service pot
9	Liquid pipe temperature sensor on the R410a loop		

Connecting pipes on the refrigerant side and water system side (For details, see the installation diagram on page 6.)

Use screw thread to connect the pipe on the water system side. Tighten the pipe to avoid water leakage.

Brazing is required on the refrigerant side.

STATEMENT

Precautions about brazing

- In the event of brazing, please use nitrogen for sweeping. This can prevent the occurrence of oxidation inside pipes. Oxidation will have adverse effects on the valves and compressors in the cooling system, and may hamper normal operations.
- Use the pressure relief valve to set the nitrogen pressure to 0.02 MPa (a pressure that can just be felt by the skin).
- Do not use antioxidants when brazing pipe connectors. Residues will block pipes and damage equipment.
- Do not use a flux when brazing copper refrigerant pipes. Use copper-phosphorus alloys (BCuP) where no flux is required.
- Flux is harmful to the cooling pipe system. For example, if a chlorine-based flux is used, pipes will be corroded. Especially when the flux contains fluorine, the flux will degrade the frozen oil.

Connecting wires

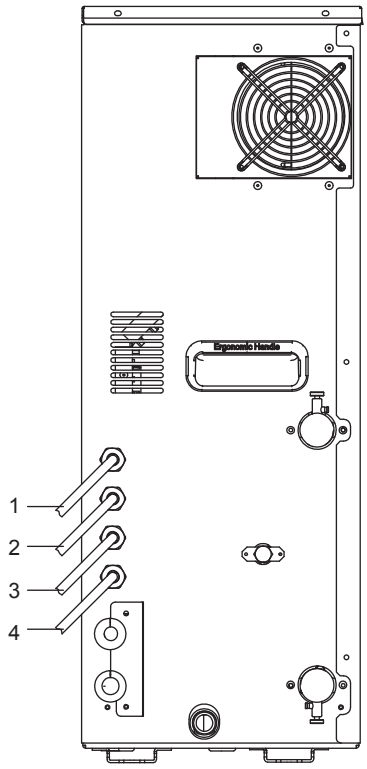

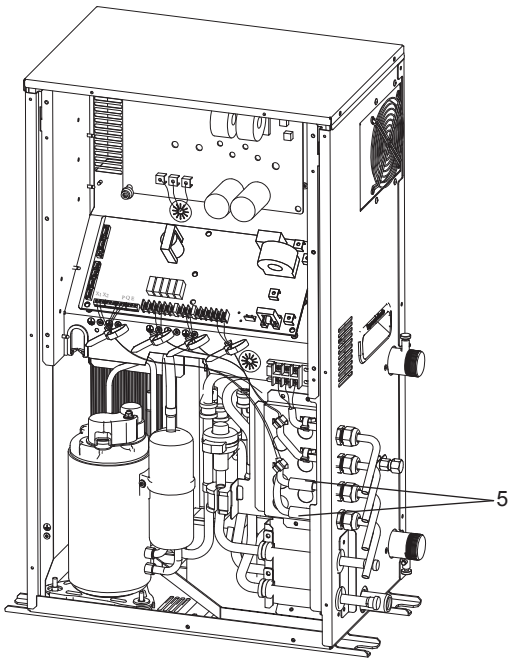

1	Power input
2	High voltage signal
3	Low voltage signal
4	communication cables
5	Magnetic ring
6	Cable tie

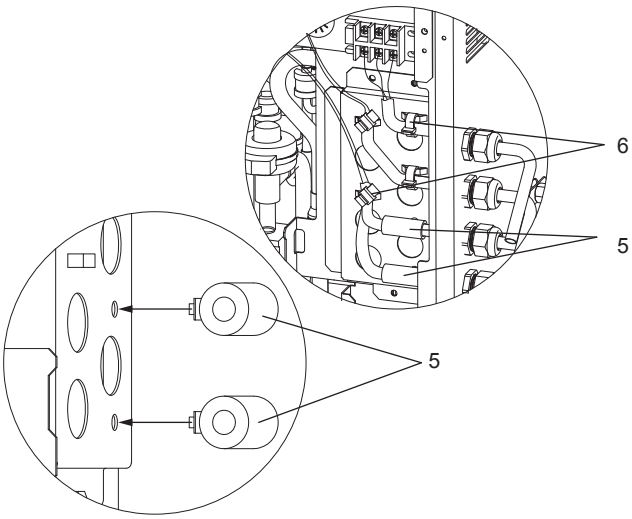

- When the external wire enters the interior of the unit through a waterproof cable connector, you need to separate the high voltage cable from the low voltage cable. For details, see the diagram.
- Inside the unit, wires should be fixed by using a cable tie through the overpass-shape component.
- The signal cables X1/X2 and P/Q/E must be fitted with a magnetic ring, and then all cables fixed on the overpass-shaped component by using a cable tie.

Connection for other components

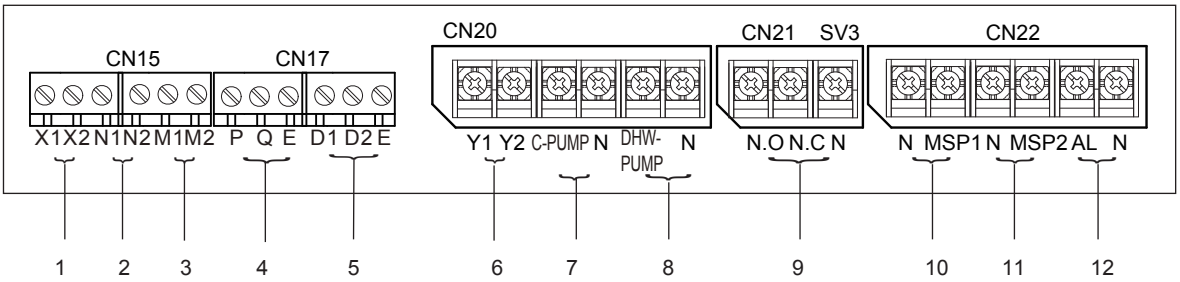

Coding	Assembly unit	Coding	Assembly unit
1	Connecting the wired controller	7	Connecting the circulating water pump AC contactor
2	Free electrical signal	8	Connecting the AC contactor for controlling water tanks and water pumps
3	Cheap electrical signal	9	Connecting the three-way valve
4	Outdoor commmunication bus	10	Multiple set point 1
5	Hydraulic module group control interface/connecting to the KNX gateway	11	Multiple set point 2
6	Reserved	12	Alarm output 220-240V~

- Wired controller wiring

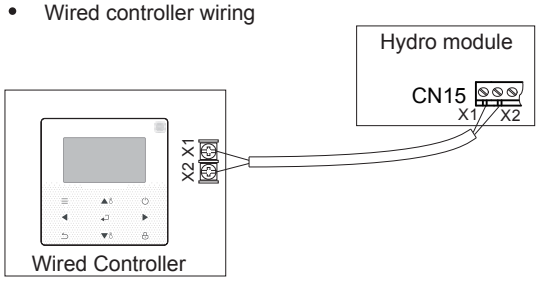

Wires X1 and X2 do not have polarity requirements

Voltage	18 V DC
Maximum running current (A)	0.1
Wiring size (mm²)	2x0.5

- Free electrical signal port N1/N2
- Cheap electrical signal port M1/M2

Used for energy management and to identify free valley. When N1 is connected to N2, the electricity is determined to be free electricity. When M1 is connected to M2, the electricity is determined to be cheap electricity. When receiving cheap or free electrical signal, the hydro module will automatically start. (For detailed settings, refer to the User Manual.)

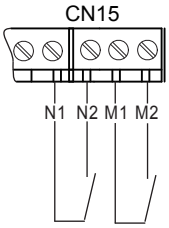

Voltage	12 V DC
Maximum running current (A)	< 0.1
Wiring size (mm²)	2x0.5

- Connection signal ports for the hydro module and ODU communication.

Used to connect the hydro module and ODU communication and transfer the control signals of the the hydro module and ODU. Please use the wire with a shield layer and ensure that the shield layer is grounded. For instructions on how to connect the ODU or MS, please see the corresponding manual.

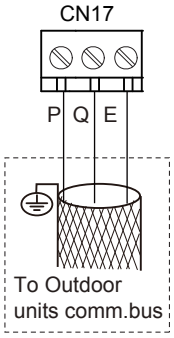

Voltage	2.5~2.7 V DC
Maximum running current (A)	< 0.1
Wiring size (mm²)	3x0.75 shielded cable

- Group control connection method/KNX gateway connection method.

The hydro module can provide the function of group control so that one module can control multiple units. In the entire system, only one master wired controller can be deployed to control units. Each unit can connect one slave wired controller for data query.

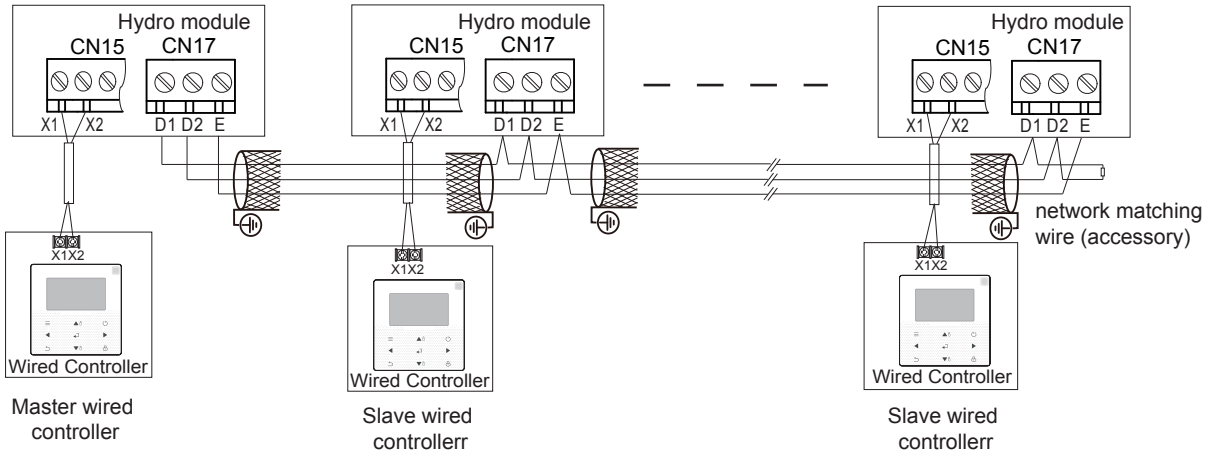

The hydro module can connect the KNX gateway via D1\D2\E so that the third-party wired controller can control the hydro module. In this case, X1 and X2 can be used for check query by connecting or without connecting the wired controller, but cannot be used for control. Equipment which connects to the KNX gateway need to meet SELV regulation.

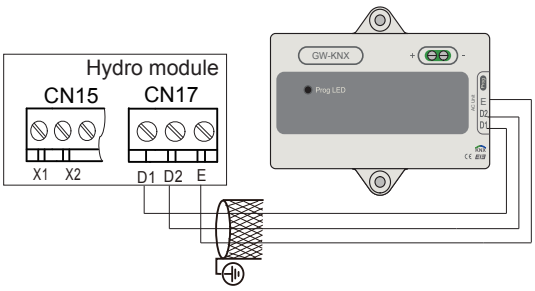

Voltage	5 V DC
Maximum running current (A)	< 0.1
Wiring size (mm²)	3x0.75 shielded cable

- Reserving Y1/Y2 at port
  Reserved port
- Output control interface of the circulating water pump
- Output control interface of the water tank and water pump

INFORMATION

The circulating water pump, tank pump can not directly connect to the main PCB

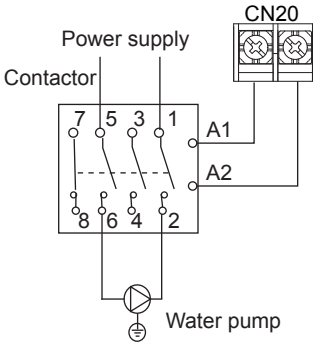

Voltage	220-240V~
Maximum running current (A)	2
Wiring size (mm²)	2x0.75

- Controlling ports via a three-way valve

The three-way valve offers the following two methods, subject to the models sold in the market. For details, see the three-way valve manual. N.O indicates normally open output, while N.C indicates normally closed output.

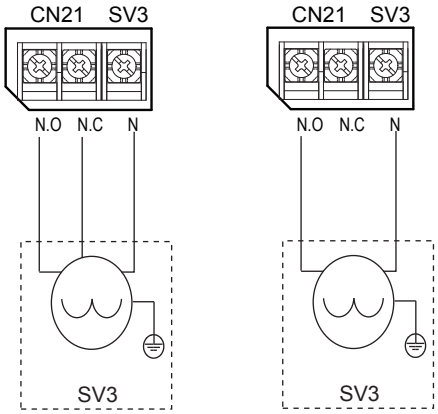

Voltage	220-240V~
Maximum running current (A)	1
Wiring size (mm²)	3x0.75

- Three-way valve installation

Check the three-way valve type. Connect it to the electric control board. For instructions on how to connect ports and wires, see page 15.

INFORMATION

Before installing the three-way valve, check the port opening direction.

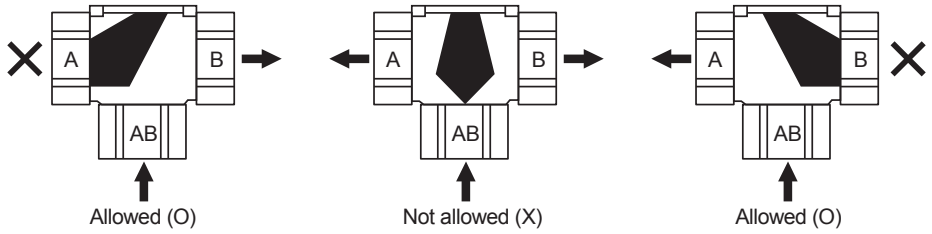

- multiple set point 1
- multiple set point 2

To set the temperature at multiple points, connect a third-party thermostat to set different temperature set points.

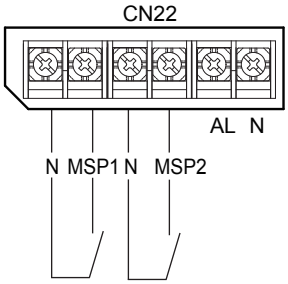

Voltage	220-240V~
Maximum running current (A)	< 0.1
Wiring size (mm²)	2x0.75

- Alarm output signal

When the unit fails, a signal can be output to indicate the unit status.

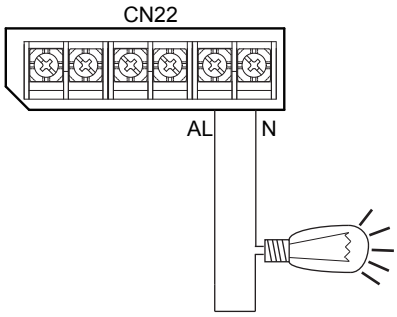

Voltage	220-240V~
Maximum running current (A)	1
Wiring size (mm²)	2x0.75

- Installing the wired controller

This unit is equipped with a wired controller, which is used to set, operate, and maintain this unit. Before operating the wired controller, please follow the installation procedures.

INFORMATION

The connecting wire is excluded.

The wired controller is delivered as a kit and must be installed indoors.

- When the temperature control function of the wired controller is used, please select an installation site that satisfies the following conditions:
- The average temperature of the room can be detected.
- The installation site is free from direct sunshine.
- The installation site is not near the heat source and the temperature is between 0 °C and 40 °C.
- The installation site is not affected by outdoor air or air pressure, for example, opening/closing of the door.
- The display can be kept clean.
- Length of commucaiton cable between hydro module and wired controller should not be longer than 50m.

Wired controller dimensions

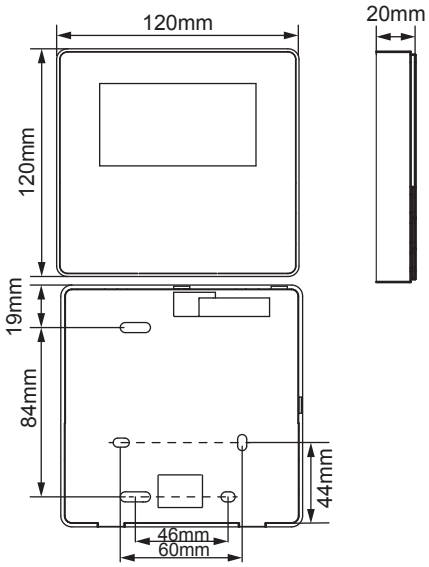

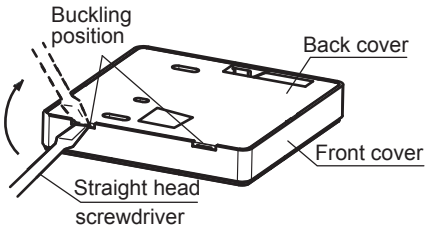

1. Insert the tip of a straight head screwdriver into the bending location at the bottom of the wired controller. Raise the screwdriver to pry open the rear cover.

INFORMATION

Pay attention to the direction when prying open the rear cover. Prying in an incorrect direction will damage the rear cover.

2. Fix the rear cover on the wall.

INFORMATION

Do not excessively tighten the installation screws to prevent rear cover deformation of the wired controller.

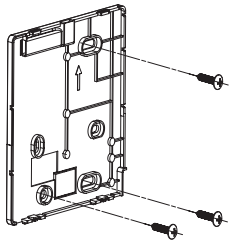

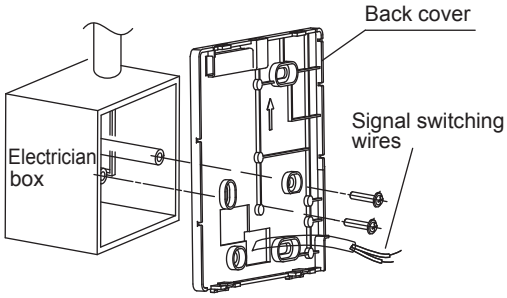

3. Wire the wired controller.

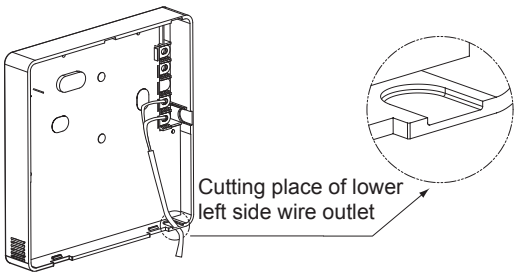

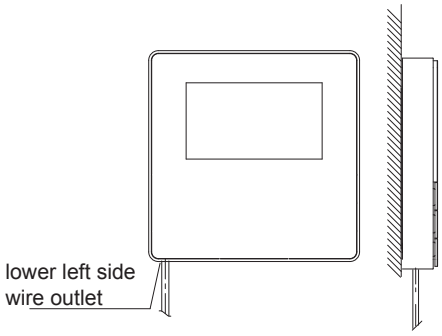

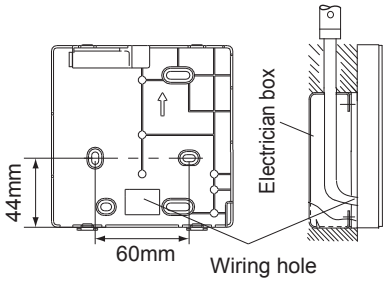

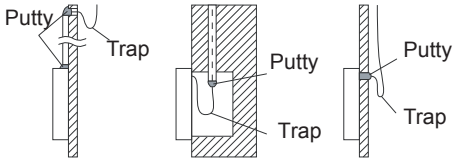

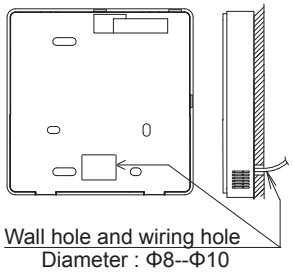

Avoid the water enter into the wired remote controller, use trap and putty to seal the connectors of wires during wiring installation.

4. Connect the wired controller to the unit. For the connection method, see page 12.

INFORMATION

Do not jam wires during installation.

6 APPLICATION EXAMPLES

Only heating mode is available and the heating mode operates in water outlet temperature control mode.

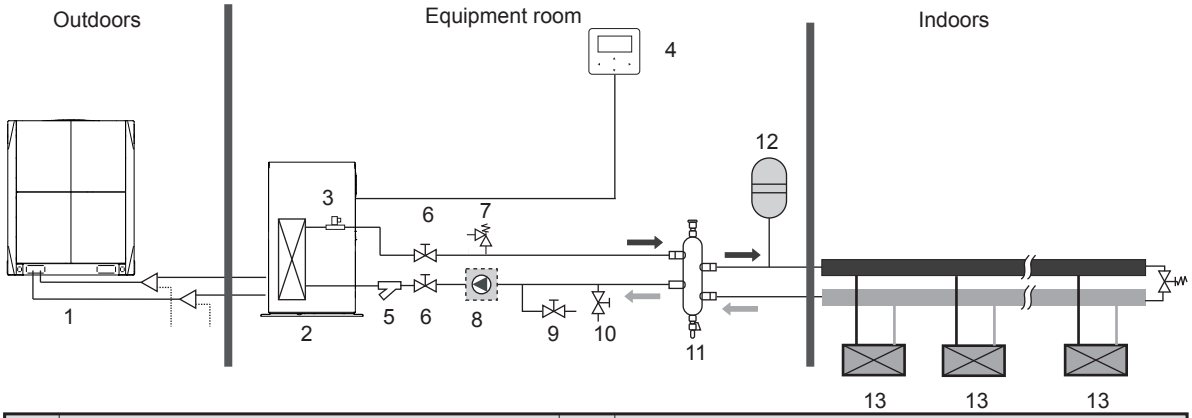

1	ODU	8	Water pump (Field supply. For model selection, see page 22.)
2	Hydro module	9	Drain valve (Field supply)
3	Water flow switch	10	Water replenishing valve (Field supply)
4	Wired controller (Accessory)	11	Water collector (Field supply)
5	Y-shaped filter (Accessory)	12	Water expansion tank (Field supply. For model selection, see page 22.)
6	Check valve (Field supply)	13	Terminals. The unit can connect to the floor heating device FHL (25 °C-45 °C), fan coil FCU (45 °C-60 °C), and radiator (60 °C-80 °C), which have different temperature requirements.
7	Safety valve (Accessory)		

On-site settings of the wired controller:

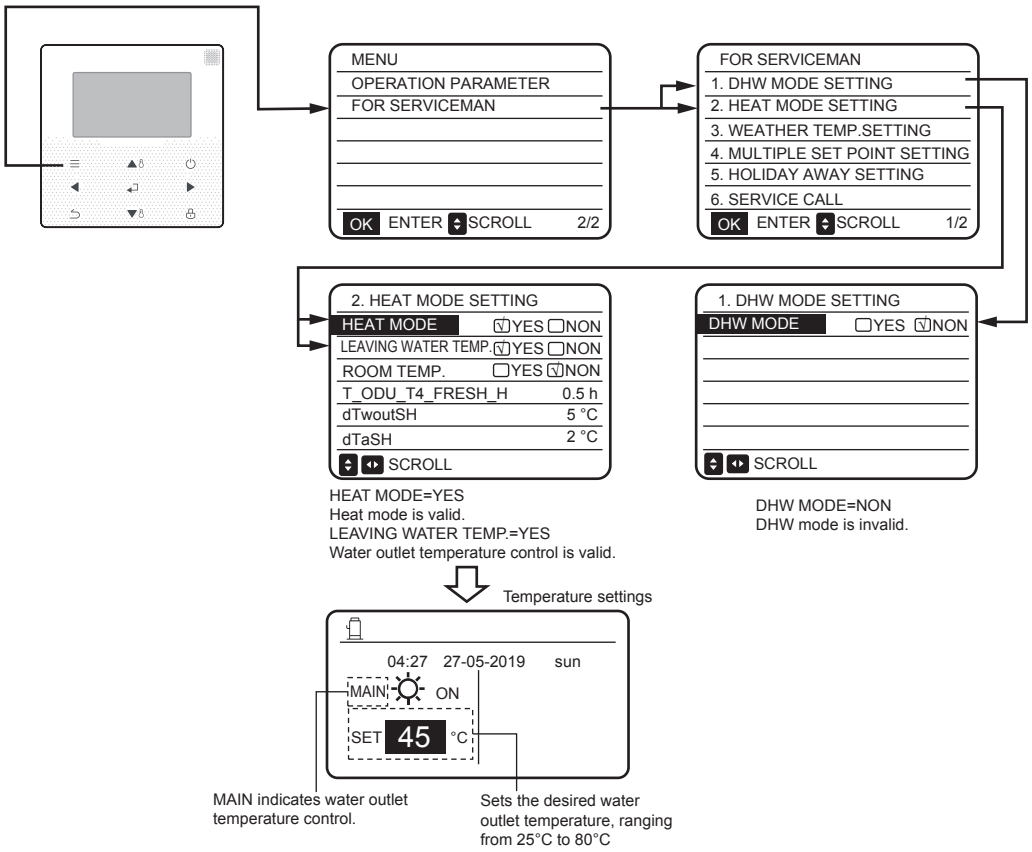

Only heating mode is available and the heating mode operates in room temperature control mode.

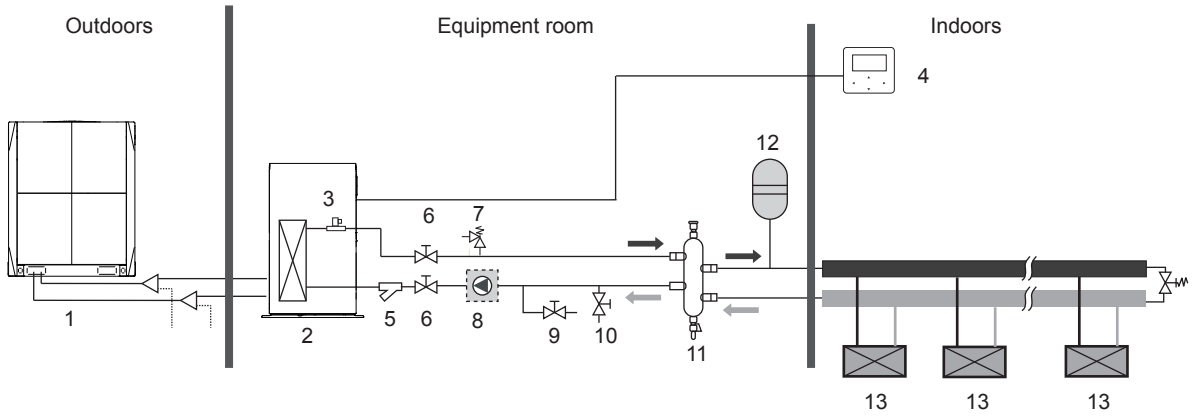

1	ODU	8	Water pump (Field supply. For model selection, see page 22.)
2	Hydro module	9	Drain valve (Field supply)
3	Water flow switch	10	Water replenishing valve (Field supply)
4	Wired controller (Accessory)	11	Water collector (Field supply)
5	Y-shaped filter (Accessory)	12	Water expansion tank (Field supply. For model selection, see page 22.)
6	Check valve (Field supply)	13	Terminals. The unit can connect to the floor heating device FHL (25 °C-45 °C), fan coil FCU (45 °C-60 °C), and radiator (60 °C-80 °C), which have different temperature requirements.
7	Safety valve (Accessory)		

STATEMENT

The wired controller is placed indoors. Room temperature is detected by the embedded temperature sensor.

On-site settings of the wired controller:

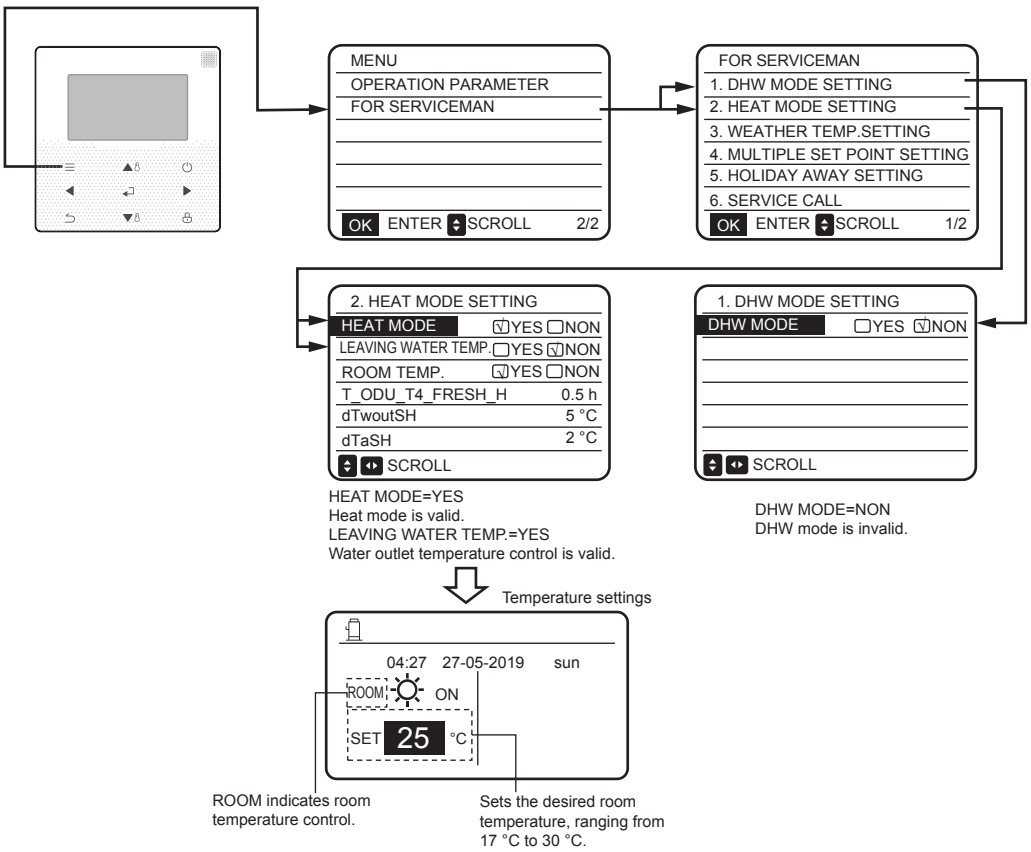

Only DHW mode is available

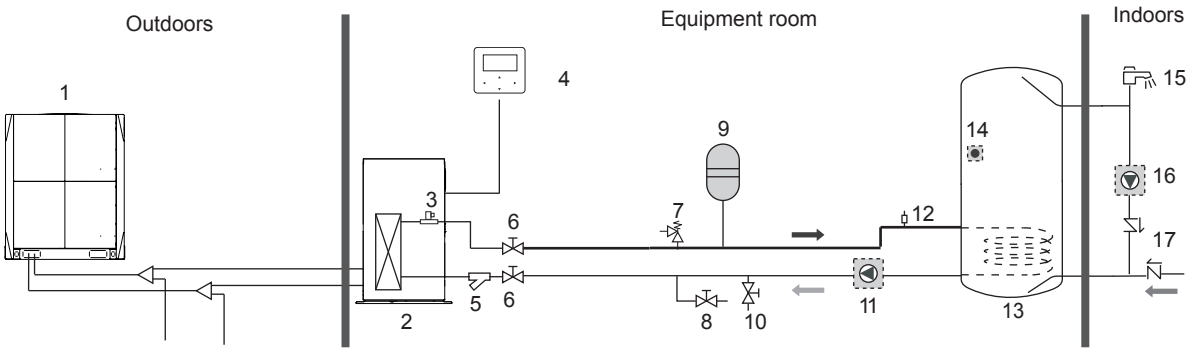

1	ODU	10	Access hole
2	Hydro module	11	Water pump (Field supply. For model selection, see page 22.)
3	Water flow switch	12	Discharge valve (Field supply)
4	Wired controller (Accessory)	13	Water tank (Field supply)
5	Y-shaped filter (Accessory)	14	Temperature sensor of the water tank (Accessory)
6	Check valve (Field supply)	15	Tap (Field supply)
7	Safety valve (Accessory)	16	Water tank and water pump (Field supply)
8	Drain valve (Field supply)	17	One-way valve (Field supply)
9	Water expansion tank (Field supply. For model selection, see page 22.)		

On-site settings of the wired controller:

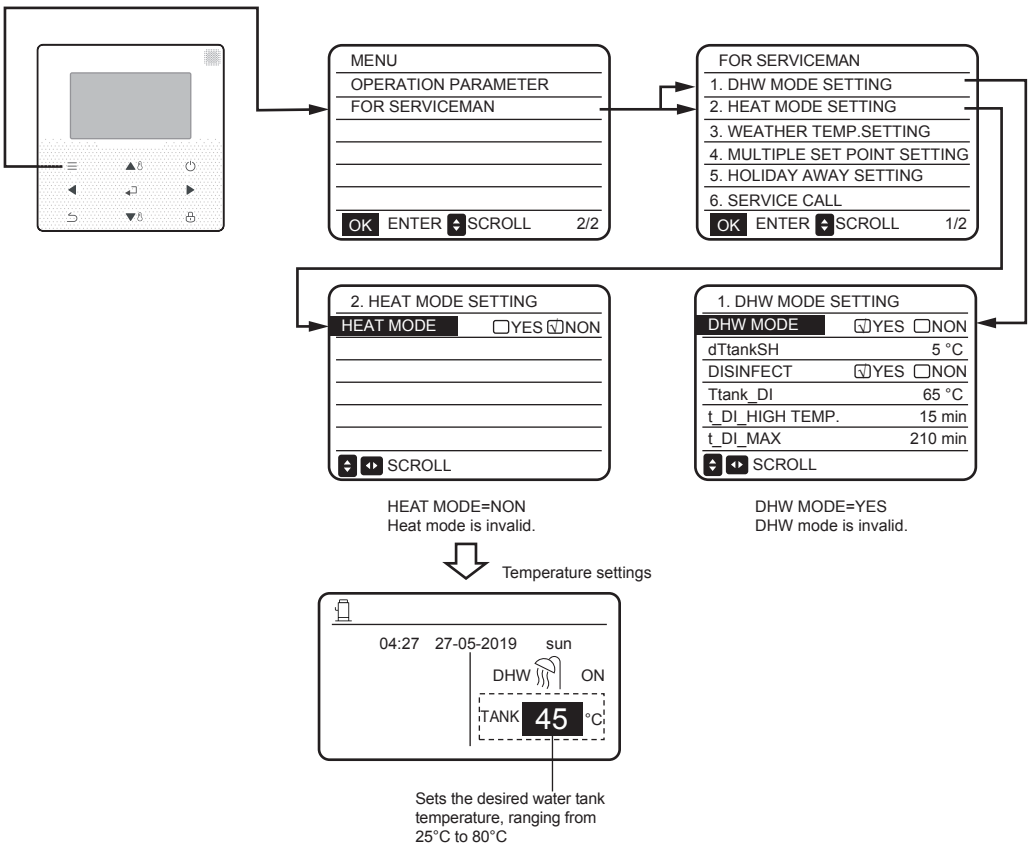

Heat Mode and DHW Mode

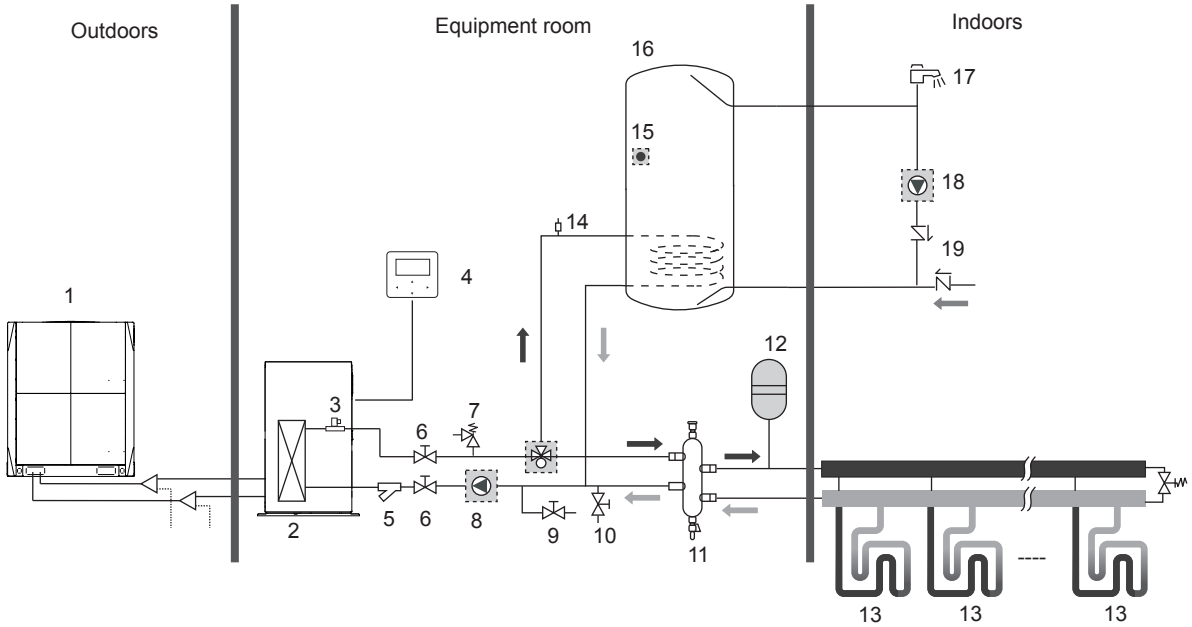

1	ODU	11	Water collector (Field supply)
2	Hydro module	12	Water expansion tank (Field supply. For model selection, see page 22.)
3	Water flow switch	13	Terminals. The unit can connect to the floor heating device FHL (25 °C-45 °C), fan coil FCU (45 °C-60 °C), and radiator (60 °C-80 °C), which have different temperature requirements.
4	Wired controller (Accessory)	14	Discharge valve (Field supply)
5	Y-shaped filter (Accessory)	15	Water tank (Field supply)
6	Check valve (Field supply)	16	Temperature sensor of the water tank (Accessory)
7	Safety valve (Accessory)	17	Tap (Field supply)
8	Water pump (Field supply. For model selection, see page 22.)	18	Water tank and water pump (Field supply)
9	Drain valve (Field supply)	19	One-way valve (Field supply)
10	Water replenishing valve (Field supply)		

STATEMENT

Terminals on the water system side can connect the fan coil (floor heating device/radiator) for heating or DHW. Water heating requires the temperature sensor of the water tank provided among accessories to detect water tank temperature. The hydro module controls the three-way valve to switch to HEAT DHW modes.

On-site settings of the wired controller:

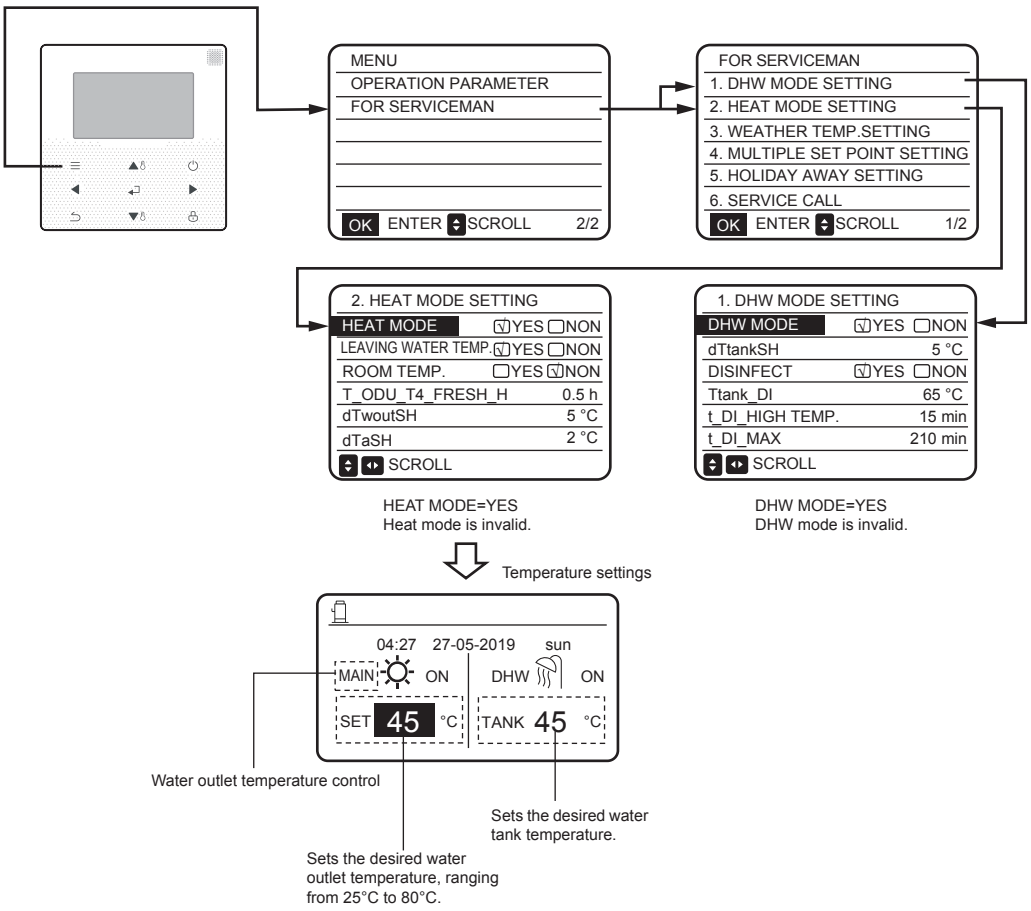

Only heating mode is available and there are multiple set points for heating mode.

STATEMENT

When one hydro module is connected to multiple terminals that have different temperature requirements (such as the floor heating device, fan coil unit, and radiator), you need to use the multiple set point function.

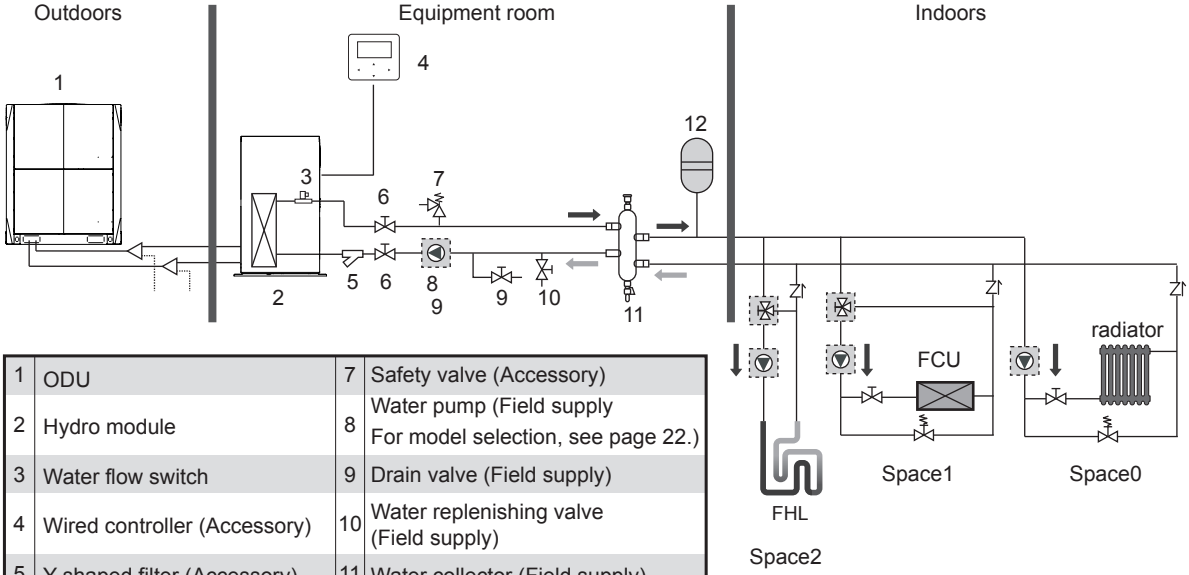

1	ODU	7	Safety valve (Accessory)
2	Hydro module	8	Water pump (Field supply For model selection, see page 22.)
3	Water flow switch	9	Drain valve (Field supply)
4	Wired controller (Accessory)	10	Water replenishing valve (Field supply)
5	Y-shaped filter (Accessory)	11	Water collector (Field supply)
6	Check valve (Field supply)	12	Water expansion tank (Field supply. For model selection, see page 22.)

Enabling the multiple set point of the wired controller:

- When only heating mode is available, the settings are the same as those described above.
- Multiple set point settings are as follows:

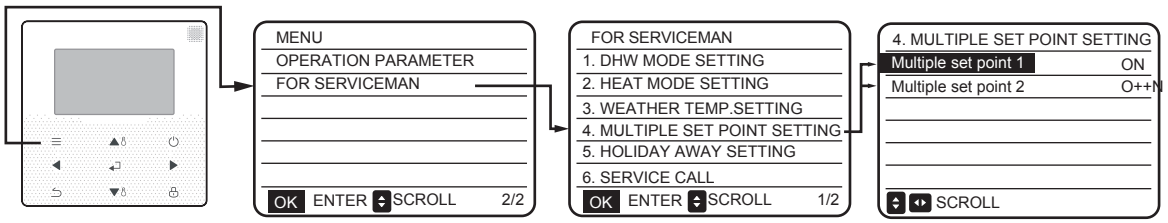

multiple setpoint1=ON: Enable multiple set point 1;
multiple setpoint2=ON: Enable multiple set point 2;

- Temperature settings of multiple set points

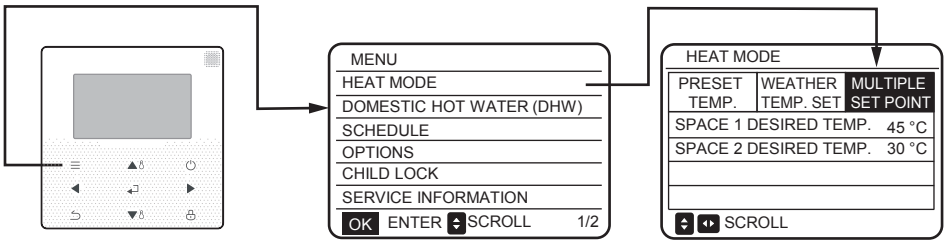

SPACE 1 DESIRED TEMP.: Desired temperature of multiple set point 1;
SPACE 2 DESIRED TEMP.: Desired temperature of multiple set point 2;

No.	Desired temp.	Thermo status			
space 0	a	OFF	ON	OFF	OFF
space 1	b	OFF	ON/OFF	ON	OFF
space 2	c	OFF	ON/OFF	ON/OFF	ON
Resulting desired temp.		OFF	a	b	c

Note:

space0 can be set on the main interface of the wired controller, while space1 and space2 temperature are set on the HEAT MODE interface.

space0 should be the terminal that requires the highest temperature, while space2 requires the lowest temperature. The temperature required by space1 is between those of space0 and space2. Both space1 and space2 require a temperature reduction device.

STATEMENT

The hydro module controls the water outlet temperature according to the highest required temperature in the event of energy demand availability.

Group control

STATEMENT

When multiple hydro modules heat water for one water tank, the group control function of the hydro module should be used.

The group control function is only valid to the DHW mode.

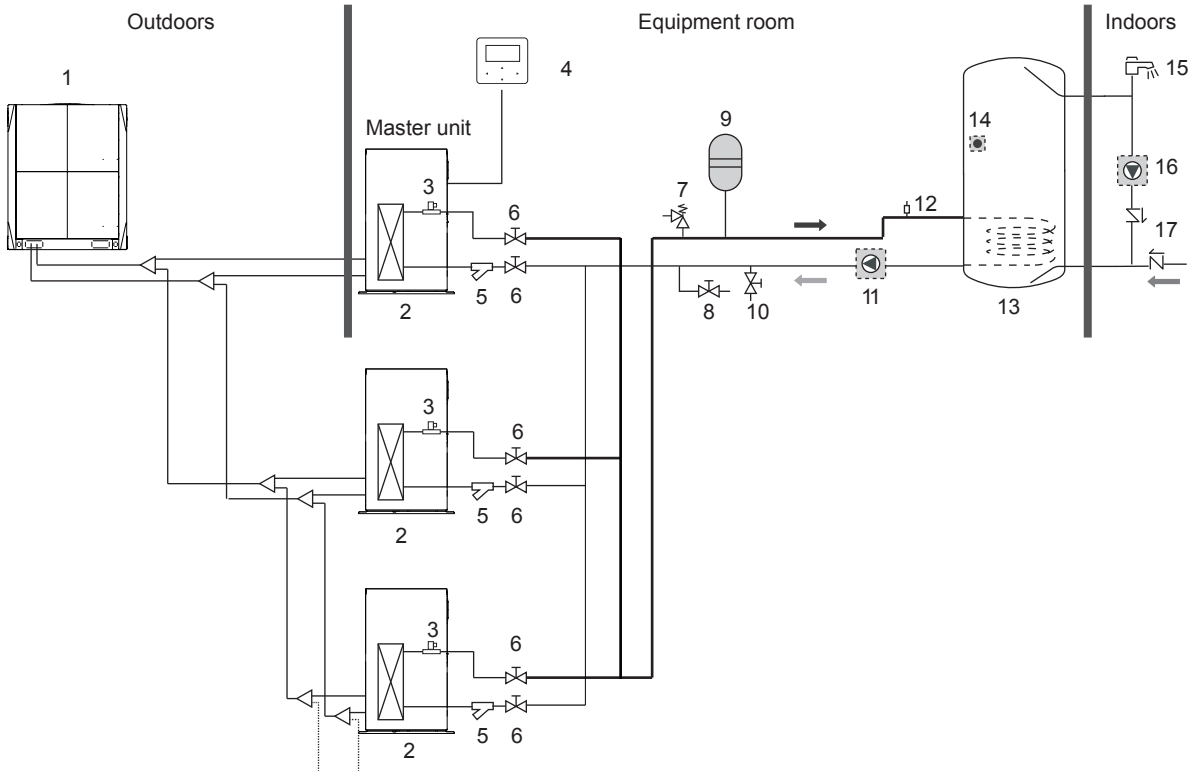

1	ODU	10	Water replenishing valve (Field supply)
2	Hydro module	11	Water pump (Field supply. For model selection, see page 22.)
3	Water flow switch	12	Discharge valve (Field supply)
4	Wired controller (Accessory)	13	Water tank (Field supply)
5	Y-shaped filter (Accessory)	14	Temperature sensor of the water tank (Accessory)
6	Check valve (Field supply)	15	Tap (Field supply)
7	Safety valve (Accessory)	16	Water tank and water pump (Field supply)
8	Drain valve (Field supply)	17	One-way valve (Field supply)
9	Water expansion tank (Field supply. For model selection, see page 22.)		

To enable the group control function, you need to use the following steps to set the DIP switch on the main board: for the master hydro module, turn digit 11; for the slave hydro module, turn digit 10.

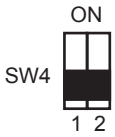

Group control function setting:

00 and 01: Group control function is unavailable.

11: Group control function is available. This hydro module is a master hydro module.

10: Group control function is available. This hydro module is a slave hydro module.

ON=1,OFF=0

STATEMENT

- Only one hydro module can be master hydro module in group control.
- The master unit must be connected to a wired controller. The wired controller is used to set the desired water tank temperature.

- The slave unit can be connected to or is not connected to a wired controller. The wired controller of the slave unit provides the query function only.
- The pump is controlled by the master unit. The temperature sensor of the water tank is connected to the master unit.
- The wired controller is connected to the master unit is used to set the desired water tank temperature.

Temperature settings for the wired controller of the master unit:

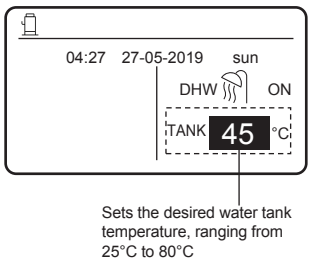

Notes:

1. When the water system side of multiple hydro modules are connected in parallel and heat water for a single water tank, you need to set master and slave hydro modules. The temperature sensor of the water tank is connected to the master hydro module and the master hydro module sends the water tank temperature to the slave hydro module.

2. Only the wired controller connected to the master unit can be used to set the desired water tank temperature. The master unit is used to control the switch of the circulating water pump.

STATEMENT

In all the preceding installation scenarios, it is recommended that the automatic air discharge valve should be installed at the highest point of the water system.

7 PUMP MODEL SELECTION

The water pump should meet the flow requirements of the hydro module. The rated flow of the hydro module is 2.4 m3/h, while the allowed flow range is [1.2, 2.9] m3/h.

The water pump model is based on the calculation of the water resistance and pipe resistance of the hydro module. The hydro module fluid pressure is as shown in the following figure.

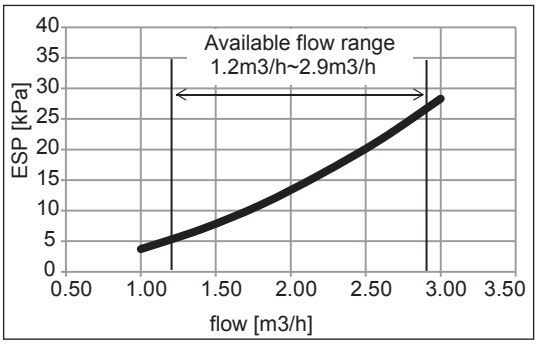

Hydro module fluid pressure

For example:

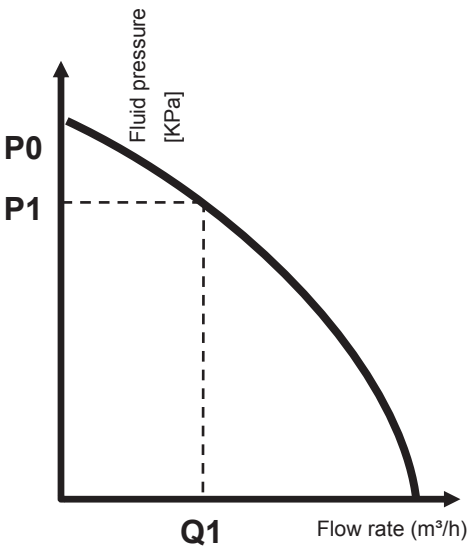

Assume that the performance curve of the selected water pump is as shown in the black figure. When total water resistance in the water system is P1, the flow rate is Q1. When Q1 is within the allowed range of the hydro module, the water pump is suitable. When Q1 is greater than 2.9 m^3/h, water pump capacity can be decreased. When Q2 is less than 1.2 m^3/h, the water pump capacity should be increased.

8 SELECTION OF EXPANSION TANK VOLUME AND PRESET PRESSURE

1) Calculating the preset pressure of the expansion tank

$$Pg = \frac{H}{10} + 0.3\ bar$$

H---The highest point of the water system is higher than the hydro module.

If Pg is less than the initially preset pressure of the expansion tank, you do not need to adjust the preset pressure of the expansion tank. In general, the initially preset pressure of the expansion tank is 1.5 bar.

2) Calculating the minimum volume of the expansion tank

$$V = 0.0693 * Vwater / (2.5 - Pg)$$

Vwater—Total water volume of the water system

Example 1: Total water volume of the water system of a project is 200 L. The highest point of the water system is 12 m higher than the hydro module. Calculate the preset pressure and volume of the expansion tank.
Answer: The preset pressure of the expansion tank is 12 / 10 + 0.3 = 1.5 bar. The required minimum volume of the expansion tank is V = 0.0693 * 200 / (2.5-1.5) = 13.86 L.

Example 2: Total water volume of the water system of a project is 72 L. The highest point of the water system is 0 m higher than the hydro module. Calculate the preset pressure and volume of the expansion tank.
Answer: The preset pressure of the expansion tankPg = 0 / 10 + 0.3 = 0.3 bar, which is 1.5 bar less than the initially preset pressure of the expansion tank. The required minimum volume of the expansion tank is V = 0.0693 * 72 / (2.5-1.5) = 4.98 L.

STATEMENT

Check that the total water volume in the installation, excluding the internal water volume of the unit, is 40L minimum.

If total hydraulic system water volume is lower 40L, Please install a balance tank. The volume of balance tank should be greater than 40L.

The leaving water couldn't be used directly to domestic hot water.

9 DOMESTIC HOT WATER TANK

A domestic hot water tank(with or without booster heater) can be connected to the unit.

The requirement of the tank is different for different unit and material of heat exchanger.

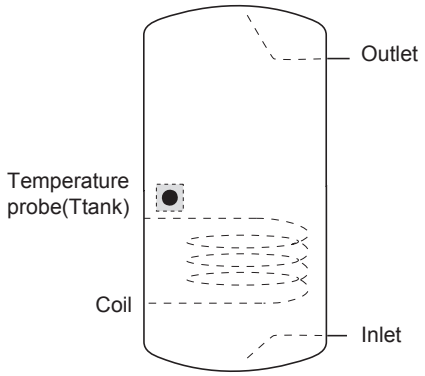

If the tank volume is greater than 240L, the temperature probe (Ttank) should be installed at a position higher than half of the tank's height.

If the tank volume is less than 240L, the temperature probe should be installed at a position higher than 2/3 of the tank's height.

If the booster is installed, the booster heater should be installed below the temperature probe.

The heat exchanger (coil) should be installed below the temperature probe.

The pipe length between the hydro module and tank should be less than 5 meters.

10 FINAL CHECK AND TEST RUN

10.1 Final Check

Before closing the switch of the unit, please read the following information:

- When you complete installation of the unit and have performed all the necessary settings, ensure that all the metal plates are closed. This can protect your from electrical parts and high-temperature parts inside the unit.
- The electric control box cover plate can only be opened by an electrician who is certified for maintenance.
- Discharge air in the system.

10.2 Test Run

Test run is described on the installation manual of the ODU. This is an automatic test run, which will last for more than 1 hour.

11 MAINTENANCE AND SERVICE

To guarantee the best usage of the unit, you must regularly check the unit and on-site wiring.

All unit maintenance must be performed by the local installation companies.

If the supply cord is damaged, it must be replaced by the manufacturer or its service agent or a similarly qualified person in order to avoid a hazard

Important information for the used refrigerant

This product has the fluorinated gas, it is forbidden to release to air.

Refrigerant type: R410A/ Kg or R134a/ Kg

Volume of GWP : 2088 or 1430, tommes CO_2 equivalent

GWP=Golabal Warming Potential

ATTENTION:

Frequency of Refrigerant Leak Checks

1) For equipment tha contains fluorinated greenhouse gases in quantities of 5 tonnes of CO_2 equivalent or more, but of less than 50 CO_2 equipment, at least every 12 months, or where a leakage detection system is installed, at least every 24 months.

2) For equipment tha contains fluorinated greenhouse gases in quantities of 50 tonnes of CO_2 equivalent or more, but of less than 500 CO_2 equipment, at least every 6 months, or where a leakage detection system is installed, at least every 12 months.

3) For equipment tha contains fluorinated greenhouse gases in quantities of 500 tonnes of CO_2 equivalent or more, at least every 3 months, or where a leakage detection system is installed, at least every 6 months.

4) This air-conditioning unit is a hermetically sealed equipment that contains fluorinated geenhouse gases.

5) Only certificated person is allowed to do intallation, operation and maintenance.

ANNEX A:Error code

Error code	Content
FE	Undefined address error
EE	EEPROM error
C7	PL protection appears three times in 100 minutes
E9	EEPROM mismatch
H4	Inverter module protction
H5	P2 protection appears three times in 60 minutes
H6	P4 protection appears three times in 100 minutes
1F6	Electronic expansion valve 1 connection error
2F6	Electronic expansion valve 2 connection error
E1	Communication error between hydro module and wired controller
E8	Water flow failure
F3	Water outlet temperature sensor error
F9	Water inlet temperature sensor error
F5	Tank temperature sensor error
E7	Discharge pipe temperature sensor error
FA	Suction pipe temperature sensor error
F7	IDU same address error
FC	R410a loop liquid pipe temperature sensor error
Fd	R134a loop liquid pipe temperature sensor error
F8	Room temperature sensor error
H8	High pressure sensor error
Hb	Low pressure sensor error
E2	Communication error between hydro box and outdoor unit
H0	Communication error between main control chip and inverter driver chip
E0	Communication error between master hydro module and slave hydro module
Ed	Outdoor unit error
E5	Abnormal power supply
PP	Compressor discharge insufficient superheat protection
P1	Discharge pipe high pressure protection
P2	Suction pipe low pressure protection
P3	Compressor current protection
P4	Discharge temperature protection
PL	Inverter module temperature protection
F1	DC bus voltage error

16100101004963 V.D

印刷说明：（仅做说明用，不做菲林）
材质: 双胶纸100g
长： 210 毫米
宽： 297毫米
规格： A4
纸张颜色： 黑白

编制：罗静、廖建 2020.6.3