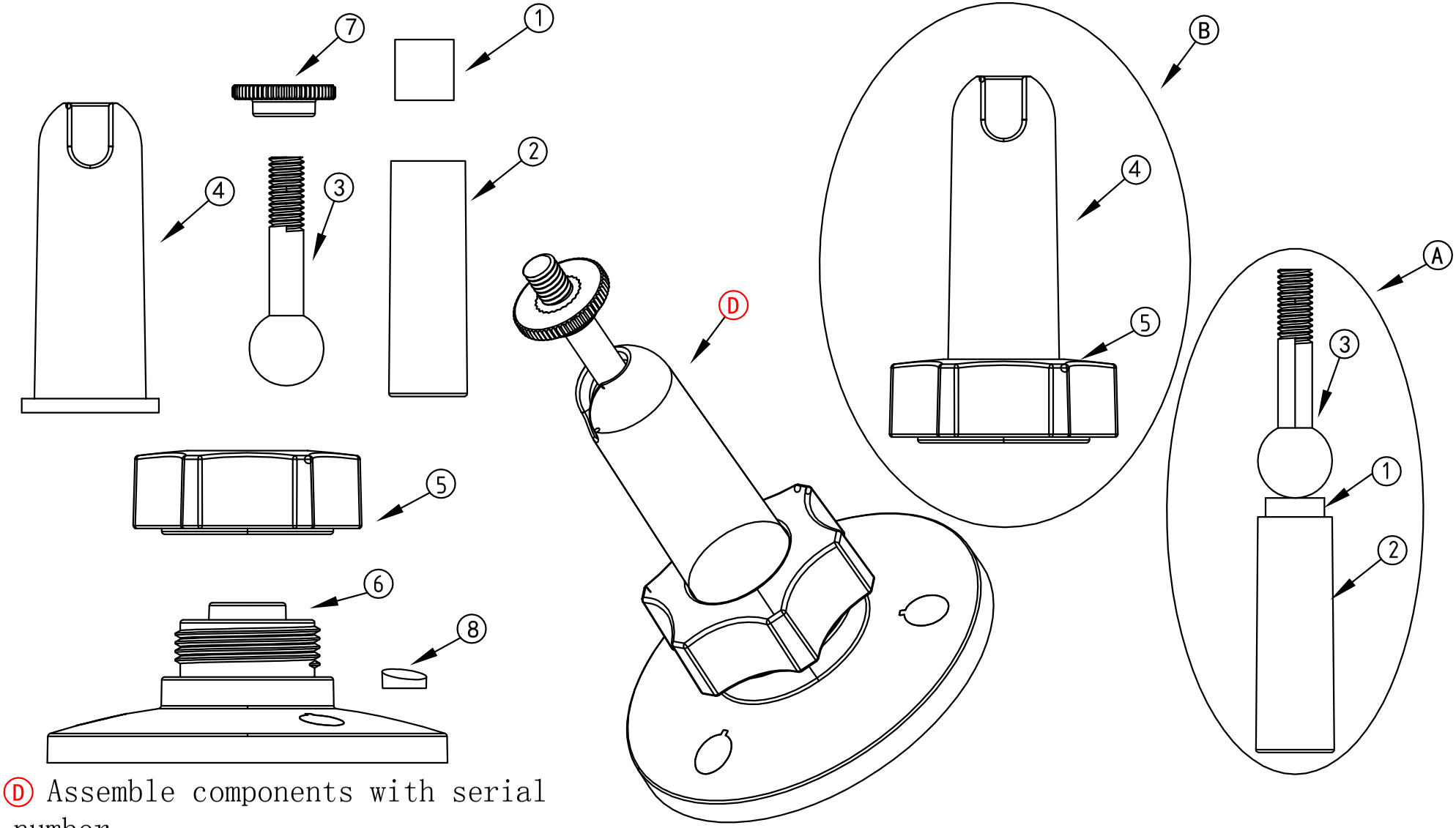

Ⓓ Assemble components with serial number

No.	Name	Quantity	No.	Name	Quantity
①	Damping column	1PCS	⑥	Bottom seat	1PCS
②	Top pillar	1PCS	⑦	Stud	1PCS
③	Nut	1PCS	⑧	Screw cap	3PCS
④	Rubber sleeve	1PCS	Ⓐ	Local assembly	
⑤	Squeeze the nut	1PCS	Ⓑ	Local assembly	

Materials	PC / ABS	Name
		Camera universal bracket
Edward chen (製図)	Edward chen (設計)	Harry (照査)	2022/10/31